DOWN FLOW CANISTER

Thank you for the purchase of the Down Flow Canister from MATHESON

Safety

MATHESON's Down Flow Canister is filled with media (dry chemical pellets) that can remove unwanted 'target' gases from process exhaust streams. The type of media used is exactly tailored to the target gas to be removed. The canister is designed to accommodate a range of process exhaust streams flows.

STOP

Please read the media SDS and contact your local MATHESON representative if you have any questions about the media, target gas or process flow regime.

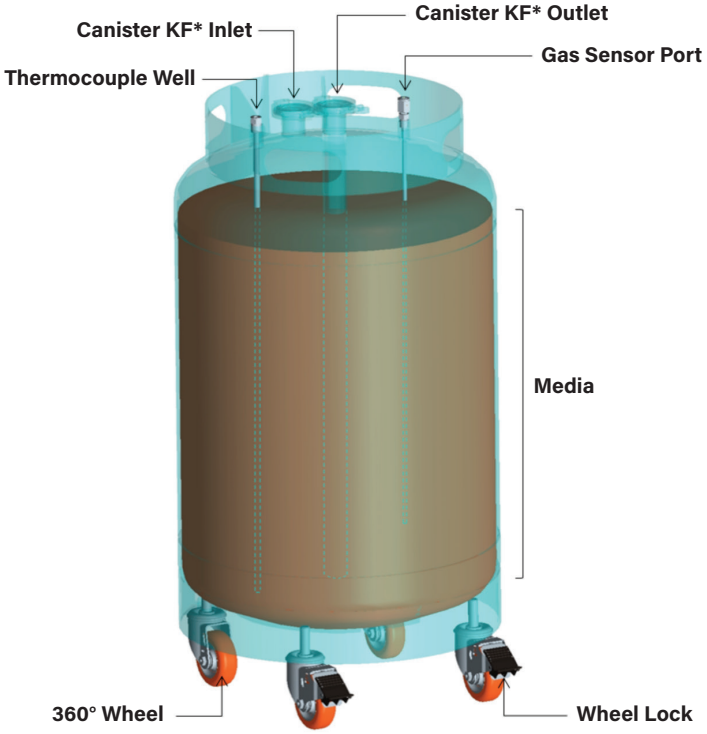

***KF connections are a sexless design. The seal is a rubber/elastomeric O-ring mounted in a centering ring, which aligns the flanges and holds the O-ring in position. Each flange has a chamfered back-surface and is mated by a circumferential clamp tightened by wing-nut. KF is also called QF, NW, and occasionally, DN.**

Installation

- After removing the canister from its outer packaging, position so that your process outlet lines up with the inlet on the canister and your exhaust connection point lines up with the outlet of the canister. Note if using a thermocouple probe it may be easier to install this into the thermocouple well prior to lining up inlet and outlet connections.
- Carefully remove the KF40 shipping cap from the canister outlet port. Next remove the KF40 shipping cap from the canister inlet port.
- Connect your process KF40 outlet with the canister KF40 inlet and your KF40 exhaust line with the canister KF40 outlet.
- If you are connecting to a gas sensor, remove the face seal cap from the sensor tube and connect your gas detector.
- Secure the canister in place and lock the wheels by depressing both wheel locks.
- MATHESON recommends performing an outboard helium leak check on all fittings made. Note an inboard leak test is not recommended as the media can be highly porous and may not be evacuated to the low levels required by a leak detector.
- Purge the canister with 20 bed volumes of inert gas following the leak check.

Questions?

Contact us at **Info@mathesongas.com**
800-416-2505

MATHESON
The Gas Professionals

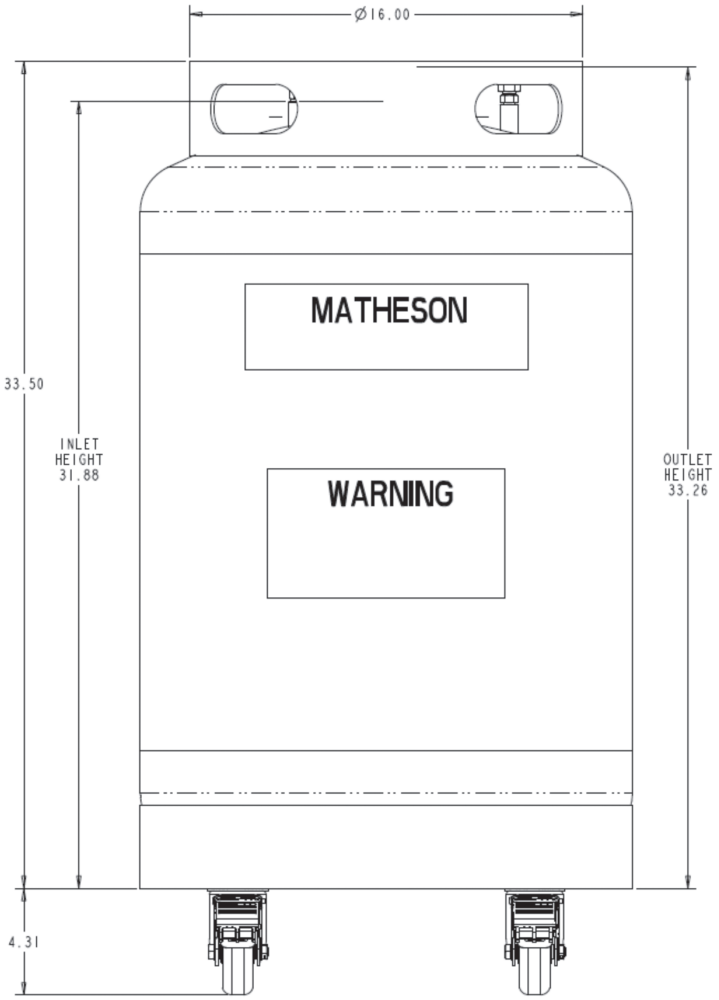

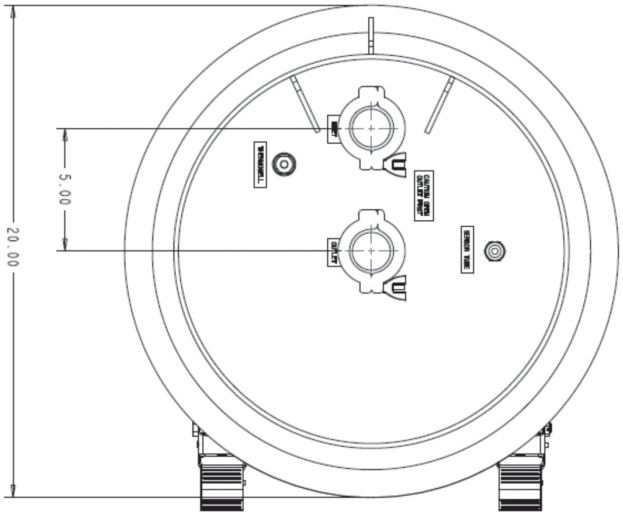

166 Keystone Drive
Montgomeryville, PA 18936
800-416-2505
www.mathesongas.com

Specifications are subject to change. Please check www.mathesongas.com for most current information.

Copyright 2026 Matheson Tri-Gas, Inc. All Rights Reserved.

All contents of this document are subject to change without notice and do not represent a commitment on the part of Matheson Tri-Gas, Inc. Every effort is made to ensure the accuracy of this information. However, due to differences in actual and ongoing operational processes and product improvements and revisions, Matheson Tri-Gas, Inc. cannot guarantee the accuracy of this material, nor can it accept responsibility for errors or omissions. This document is intended to serve as a general orientation and cannot be relied upon for a specific operation. No warranties of any nature are extended by the information contained in these copyrighted materials.

All names, products, and services mentioned herein are the trademarks or registered trademarks of their respective organizations and are the sole property of their respective owners. MATHESON and the MATHESON logo are registered trademarks of Matheson Tri-Gas, Inc.

Printed in USA ULTIMA-02 02/2026

MATHESON
The Gas Professionals