NANOCHEM® H/HP-Series Gas Purifiers

Features and Benefits

- Purification for all ultra-high purity applications
- **Highest Lifetimes**
- **Best Impurity Removal Efficiencies**
  - Removes critical contaminants to sub parts-per-billion level (< 0.1 ppb in inert gases)
- **End-Point Detection available (H-Series)**
- Enhances manufacturing process economy and improves equipment performance
- Provides consistently high purity gas under fluctuating inlet impurity conditions
- Improves component lifetime and reduces particle generation by removing moisture and volatile metals from corrosive gases
- No moving parts or power requirements
- Easy to operate
- Built-in 1-valve bypass
- Does not require heating or cooling
- Low overall cost of ownership
- Media refills available for all sizes
- Inlet and outlet springless diaphragm valves

Specifications

- All metal parts, Type 316L stainless steel, nickel and Elgiloy® valve diaphragm
- 0.003 µm particle filter with 99.9999999% retention (PTFE or 316L SS)
- Internal surface finish < 15 µin R_a
- H-Series: Maximum allowable working pressure of 150 psig (1.13 MPa) with the fiber optic end-point detector or 500 psig (3.5 MPa) without detector
- HP-Series: Maximum allowable working pressure of 2850 psig (19.7 MPa)
- Maximum operating temperature of 70°C

Connections

- Female inlet and male outlet 1/4 inch VCR®-compatible face seal fittings

Options

- Fiber optic end-point detector indicates when it is time to replace the purifier (for non-corrosive gases only)
- Pneumatically-actuated diaphragm valves
- Manually or pneumatically-actuated bellows valves

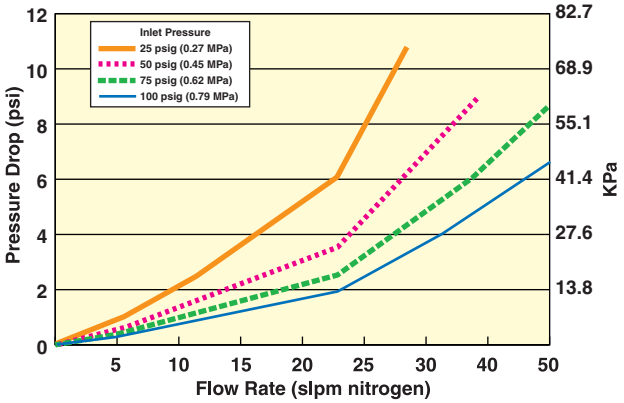

Description

The NANOCHEM® H/HP-Series Purifiers provide economical gas purification in multi-tool or single-source applications.

With a welded bypass valve incorporated in the purifier unit, H/HP-Series purifiers are often used in gas enclosures, both source and purge gas, where space is limited. Its low width makes it ideal for installation in restricted space or gas jungle applications where multiple vertical gas lines are being run.

Purification media refills are available through MATHESON.

MATHESON
The Gas Professionals

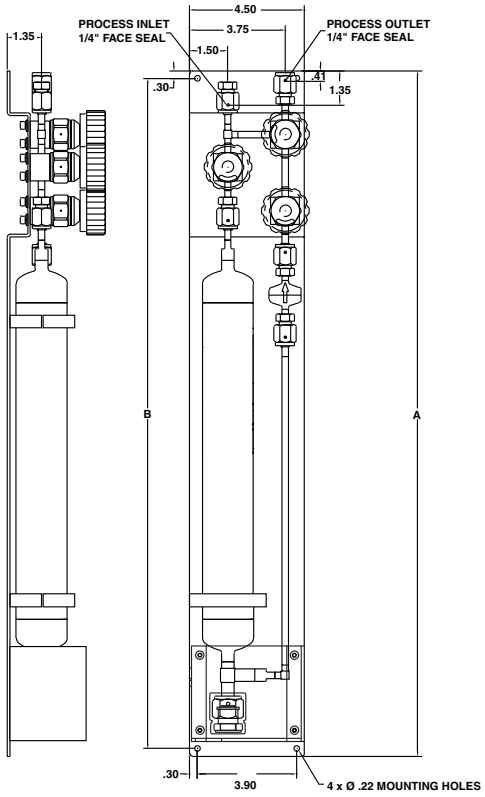

Operating Pressure and Flow Rates

	H-500	HP-500
Maximum allowable working pressure, psig	500	2850
MPa	3.5	19.7
Maximum recommended flow rate slpm, N_2	50	50
NM^3/hr, N_2	3	3

Dimensions inches (mm)

H/HP-Series Purifier	H/HP-500	HP-300
A	26.90	21.09
	(683.26)	(535.68)
B	26.30	20.49
	(668.02)	(520.45)

Gas Type	Impurities Removed
Nitrogen (N_2), Argon (Ar), other inerts	< 0.1 ppb H_2O, O_2, CO_2 LDL < 1 ppb CO* < 0.1 ppb NMHC (with OMX-Plus™) LDL NO_x, SO_x, H_2S
Ammonia (NH_3)	< 0.1 ppb H_2O, O_2, CO_2 in inert gas LDL < 1 ppb CO* < 45 ppb H_2O in ammonia LDL NH_3-CO_2 complexes, SiH_4, Siloxanes, GeH_4, H_2S
Silane (SiH_4)	< 0.1 ppb H_2O, O_2, CO_2 LDL < 1 ppb CO* Chlorosilanes, disilane, siloxanes, arsine, phosphine
Arsine (AsH_3), Phosphine (PH_3)	< 0.1 ppb H_2O, O_2, CO_2 LDL < 45 ppb H_2O in phosphine LDL < 75 ppb H_2O in arsine LDL CO, oxyacids ($H_xAs_yO_z$, $H_xP_yO_z$)
Hydrogen (H_2), Methane CH_4), Ethane (C_2H_6), other HC	< 0.1 ppb H_2O, O_2, CO_2 LDL < 1 ppb CO* NO_x, SO_x, H_2S
Sulfur Hexafluoride (SF_6), Carbon Tetrafluoride (CF_4), other fluorocarbons	< 0.1 ppb H_2O, O_2, CO_2 in inert gas LDL < 10 ppb O_2, H_2O in sulfur hexafluoride LDL
Oxygen (O_2), Carbon Dioxide (CO_2), Nitrous Oxide (N_2O)	< 10 ppb H_2O
Carbon Monoxide (CO)	Metal Carbonyls: Fe, Ni
Corrosives (HCl, HBr, Cl_2, SiH_2Cl_2, $SiHCl_3$, BCl_3)	< 1 ppb H_2O in inert gas < 100 ppb H_2O in HBr LDL < 150 ppb H_2O in HCl Volatile Metals: Fe, Mo, Cr, Ni, Mn, Ti

LDL – Lower Detection Limit by State-of-the-Art Analytical Instrumentation
NMHC – Non-methane Hydrocarbons
*NOTE: CO is removed efficiently by OMX & OMX-Plus™ media at low flow rates (recommend 1/10 of normal flow rate)

For a detailed list of purification media and impurities removed, refer to the Purification Media Table in NANOCHEM® Purification Solutions Brochure.

Equipment Technology Center
166 Keystone Drive
Montgomeryville, PA 18936
Tel: 800-828-4313 • Fax: 215-619-0458
Email: Info@mathesongas.com

Specifications are subject to change. Please check **www.mathesongas.com** for most current information.

Printed in USA PB030 R09/2021

MATHESON
The Gas Professionals